OPTIMUM®
MASCHINEN - GERMANY

# *Data sheet*

## *Folding machine*

## FP30

## *Technical data*

| |
|---|
| Max. material width 320 mm |
| *Weight* 10 kg |
| 2,5 mm |
| *Sheet thickness 2.5 mm* |
| ***Max. folding capacity at 90°*** |
| *Aluminium / Copper - 300 x 2 mm* |
| *Steel sheet - 300 x 1 mm* |
| *Folding segments* 150 , 75 , 50 ,25 mm |

*The folding machine is clamped in a vise.*

*Wear protective gloves when you handle sharp-edged parts.*

*The folding machine is not a machine within the meaning of the Machinery Directive. The drive takes place with your own hands.*

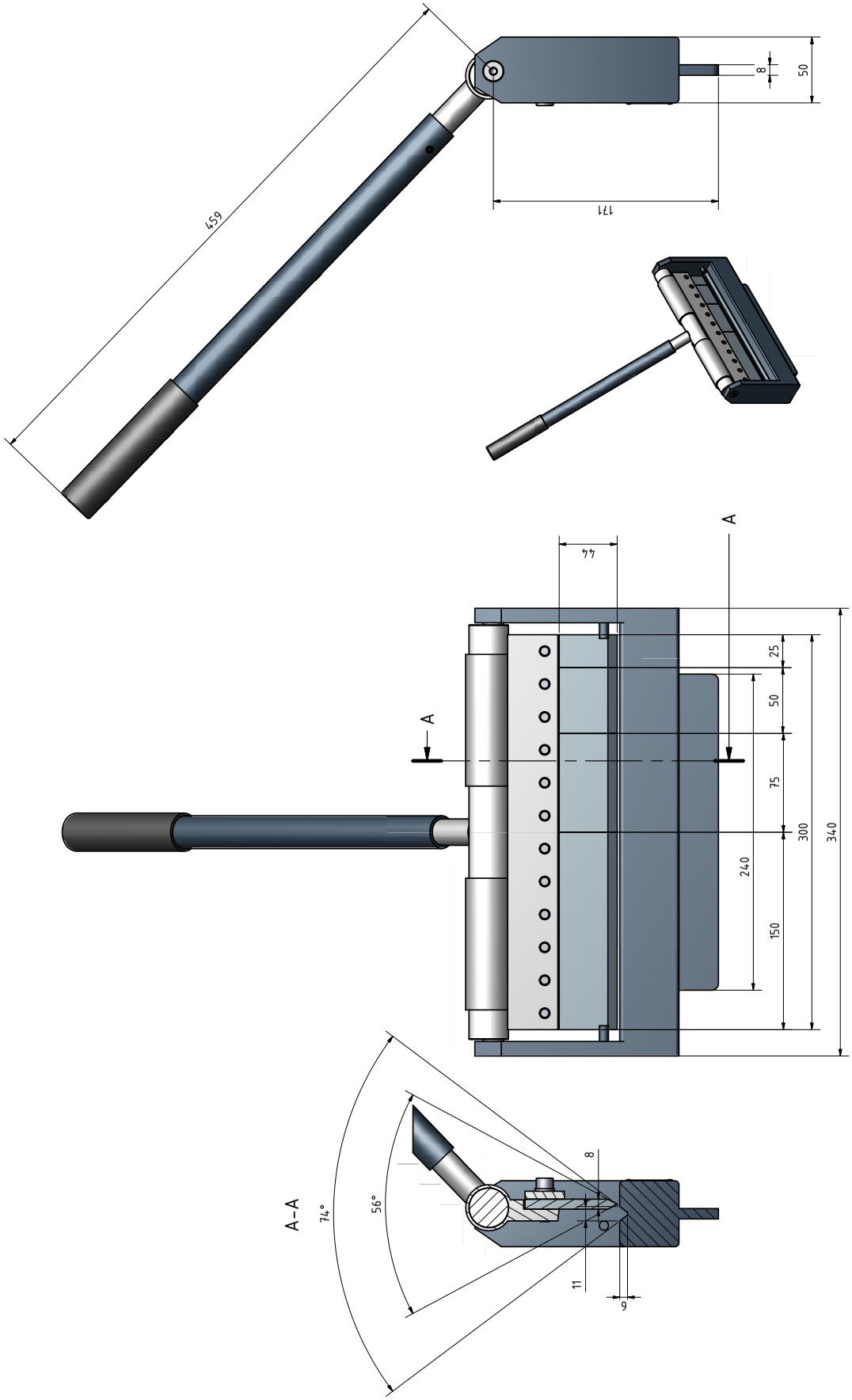
459
171
8
50
A
44
A
25
50
75
150
240
300
340
A–A
74°
56°
8
11
9

# Ersatzteile - Spare parts - FP 30

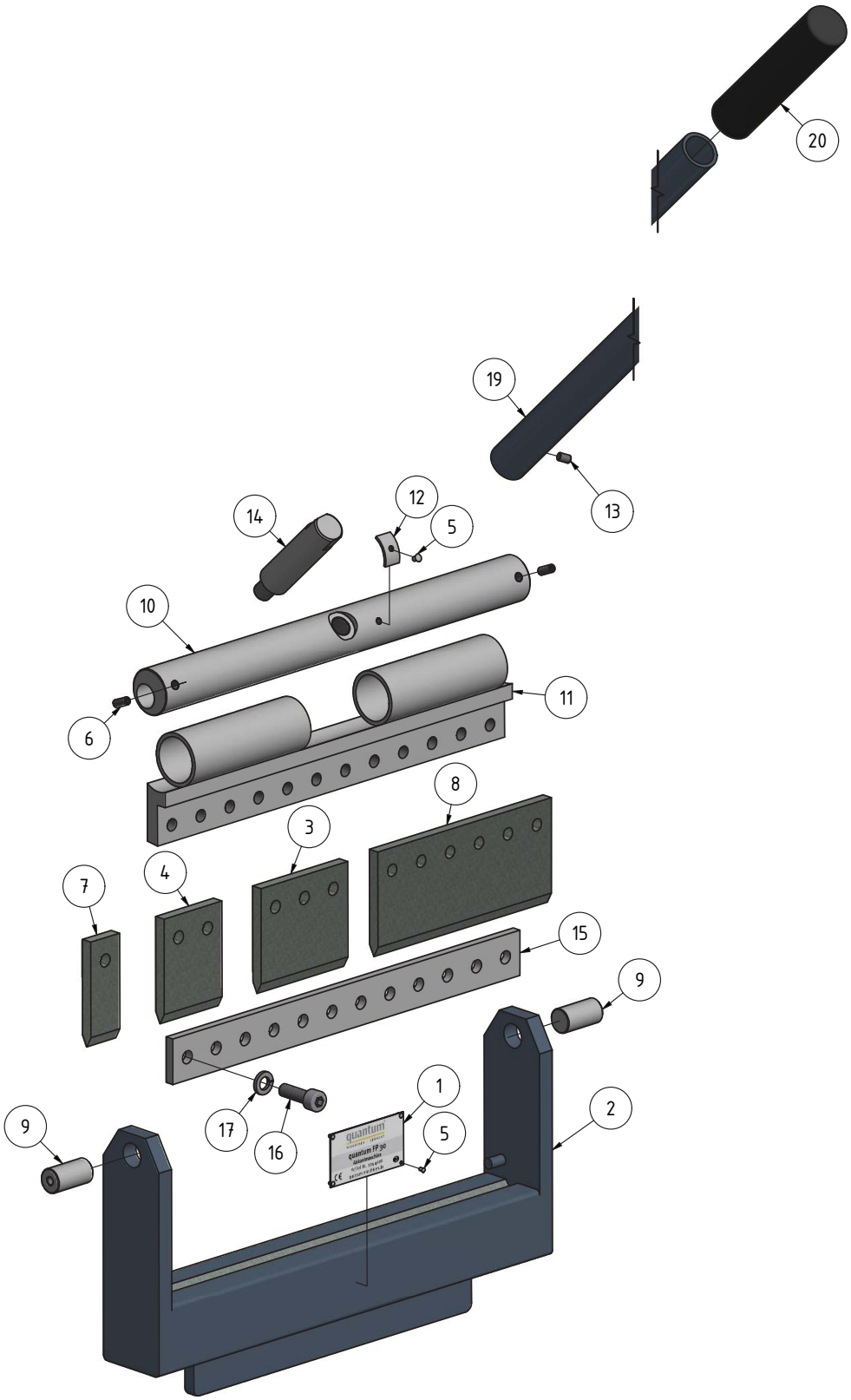


2-2: FP 30



Translation of original instruction

## Ersatzteilliste - Spare part list

| Pos. | Bezeichnung | Designation | Menge Qty. | Grösse Size | Artikelnummer Item no. |
|---|---|---|---|---|---|
| 1 | Label | Label | 1 | | |
| 2 | Rahmen | Frame | 1 | | |
| 3 | Abkantsegment | Bending segment | 1 | 75 mm | 0324402803 |
| 4 | Abkantsegment | Bending segment | 1 | 50 mm | 0324402804 |
| 5 | Niet | Rivet | 5 | | |
| 6 | Gewindestift | Grub screw | 2 | ISO 4026 - M5 x 12 | |
| 7 | Abkantsegment | Bending segment | 1 | 25 mm | 0324402807 |
| 8 | Abkantsegment | Bending segment | 1 | 150 mm | 0324402808 |
| 9 | Exzenterlager | Eccentric bearing | 2 | | 0324402809 |
| 10 | Exzenter | Eccentric | 1 | | 0324402810 |
| 11 | Halter | Holder | 1 | | |
| 12 | Anschlagstück | Limit block | 1 | | |
| 13 | Gewindestift | Grub screw | 1 | ISO 4026 - M5 x 8 | |
| 14 | Gewindebolzen | Thread bolt | 1 | | 0324402814 |
| 15 | Klemmleiste | Clamping guide | 1 | | |
| 16 | Innensechskantschraube | Hexagon socket screw | 12 | ISO 4762 - M8 x 25 | |
| 17 | Federring | Spring ring | 12 | DIN 127 - A 8 | |
| 19 | Hebelverlängerung | Lever extention | 1 | | 0324402819 |
| 20 | Griff | Grip | 1 | | 0324402820 |